Air vent valve 3700

- Nickel plated brass
- Male thread ⅛"– ½"

Description

Manual air vent valve.

Construction

Manual air vent valve in nickel plated brass with key grip. Connection male thread 1/8"– 1/2" and Ø2 mm air vent hole. Sealing ring in PTFE (not 3700-6).

Maintenance

Air vent valves are normally maintenance-free but should be inspected periodically.

Technical data

Valve body	Nickel-plated brass CW614N
Hand wheel	POM
Seal ring	PTFE

Maximum working pressure: 10 bar
Maximum working temperature: +90°C

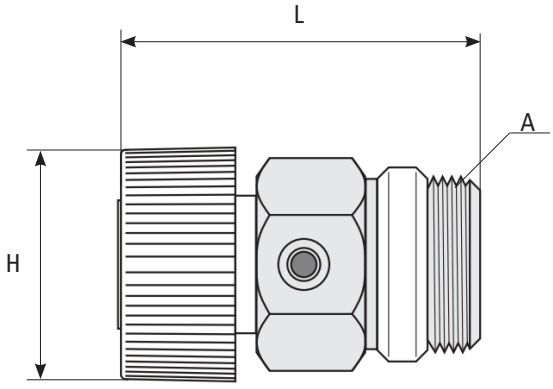

Item number	Description	Connection thread A	Length L	Height H	Weight (kg per piece)
0437000600	Air vent 3700-6, 1/8"M	1/8"M	25	16	0,1
0437000800	Air vent 3700-8, 1/4"M	1/4"M	28	18	0,3
0437001000	Air vent 3700-10, 3/8"M	3/8"M	28	18	0,4
0437001500	Air vent 3700-15, 1/2"M	1/2"M	35	18	0,5

All dimensions in millimetres

Subject to technical changes and corrections without notice